geometry

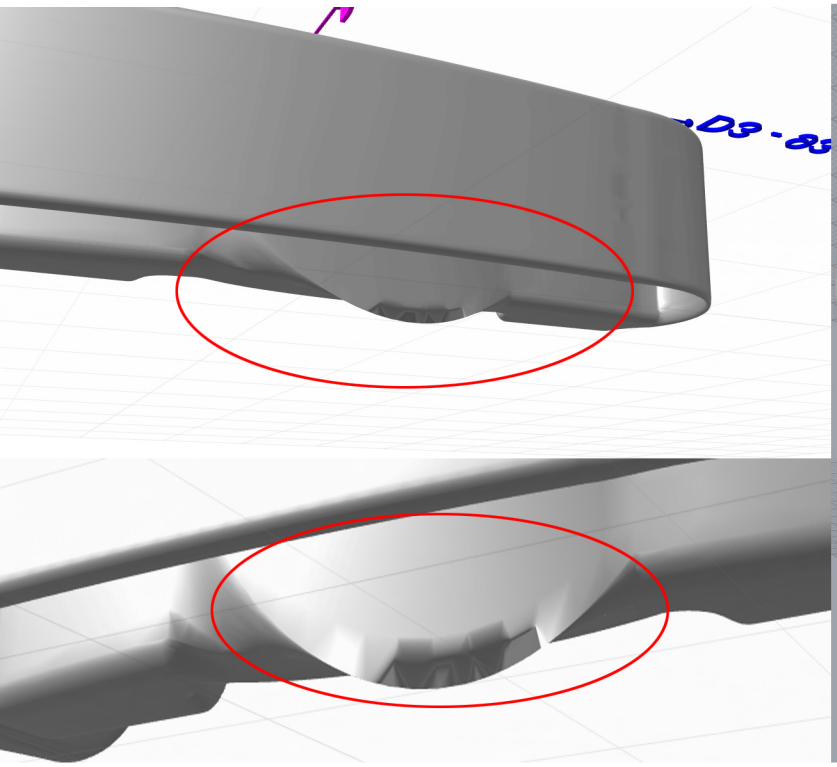

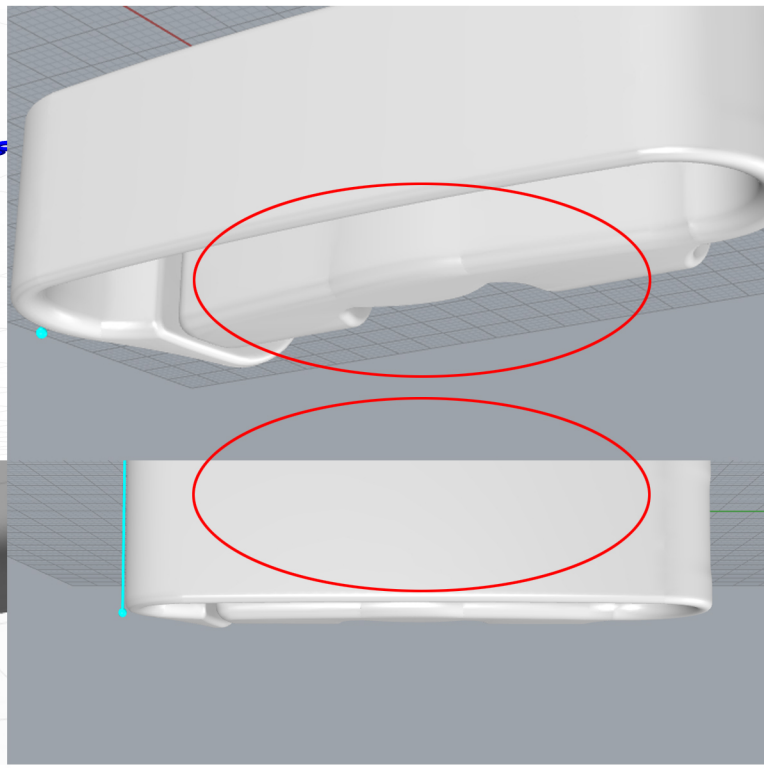

geometry

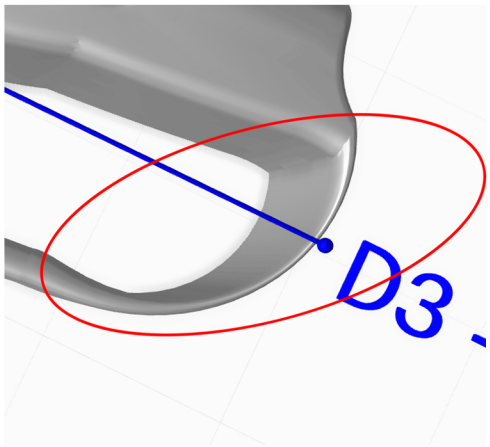

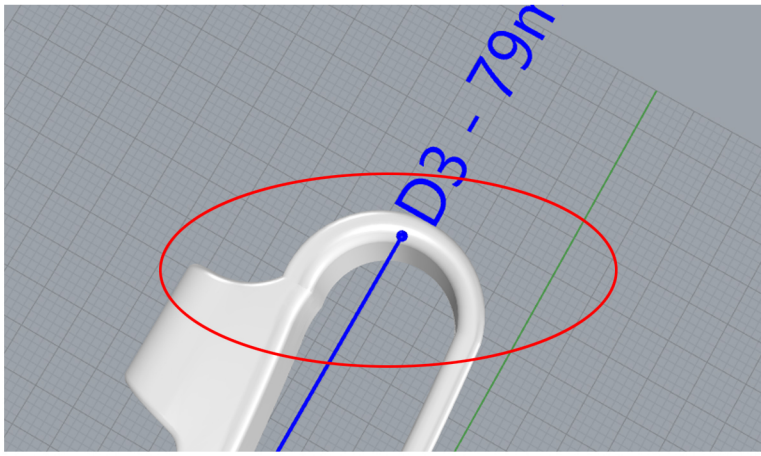
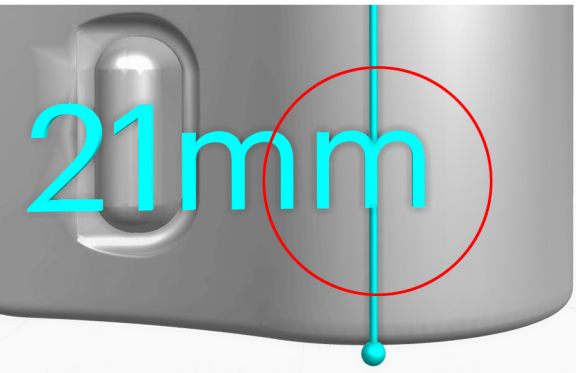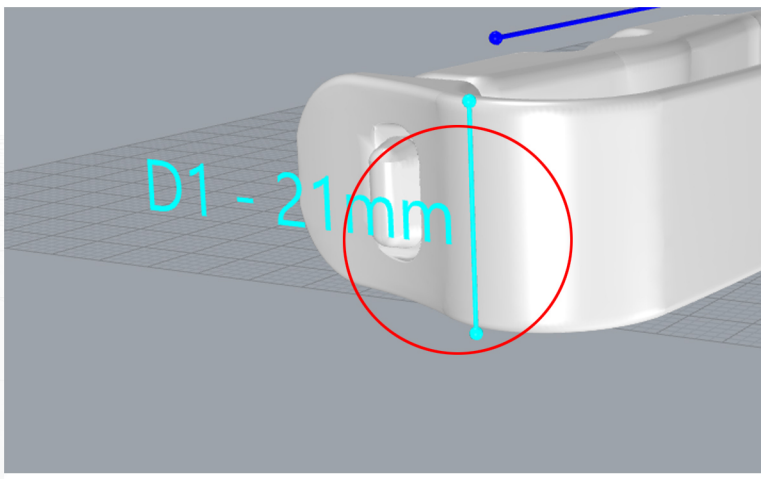
quote position